Zoey

Stroller + Carrycot

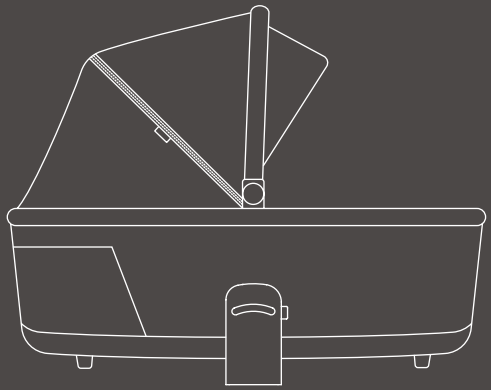

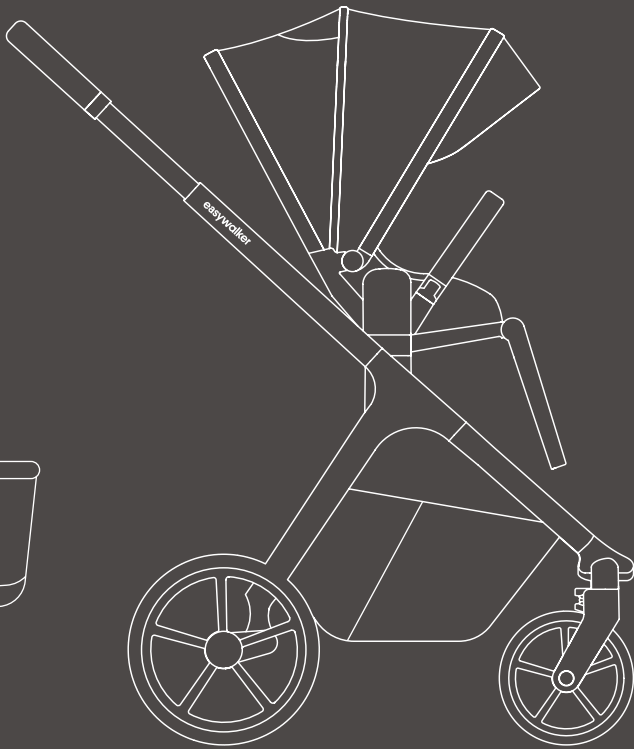

easywalker

Welcome to the Easywalker family!

Congratulations on the purchase of your Zoey.

Lifetime Warranty

Please register your product on our website within 6 months of your purchase:
www.easywalker.com/en/register-your-product/

Easywalker B.V.
Generaal Vetterstraat 76A
1059 BW Amsterdam
The Netherlands

hello@easywalker.com
www.easywalker.com

easywalker

REGISTER

MANUAL

Index

Stroller Setup & Operations	4
Carrycot Setup & Operations	15
Accessories	22
Distributors	24

Setup & operations

Asennus ja toiminnot / Beállítás és műveletek
Configuración y Operaciones / Configurare și operațiuni
Configuração e Operações / Configuration et opérations
Configurazione e operazioni / Einrichtung & Betrieb
Настройка и операции / Installatie & Operaties
Installation och drift / Iestatīšana un darbība
Nastavení a provoz / Nastavenie a prevádzka
Nustatymas ir veikla / Oppsett og drift
Opsætning og drift / Postava i operacije
Seadistamine ja tegevused / Ustawienia i operacje

IMPORTANT! READ CAREFULLY AND KEEP FOR FUTURE REFERENCE.

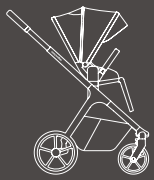

max 22 kg

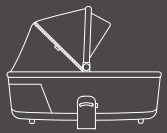

max 9 kg

1.

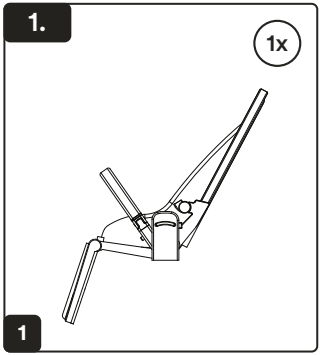

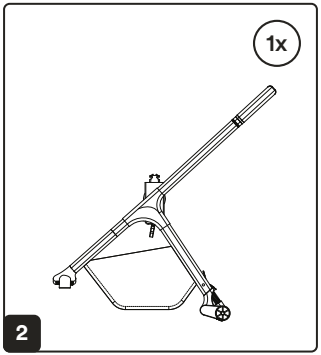

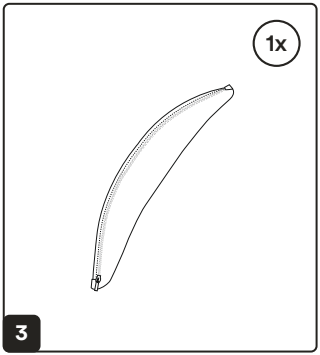

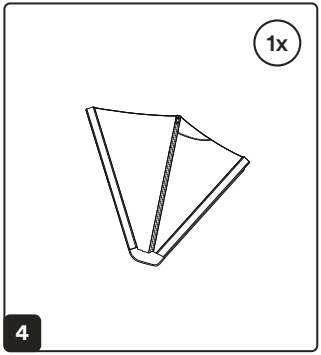

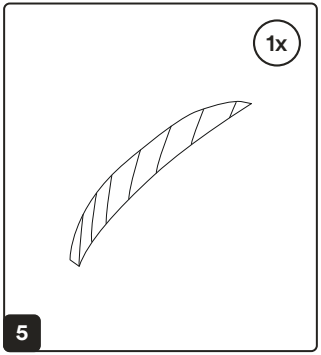

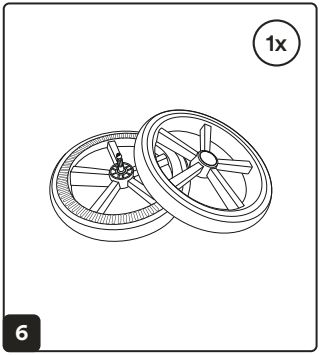

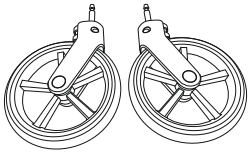
1x
7

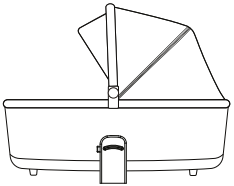
1x
8

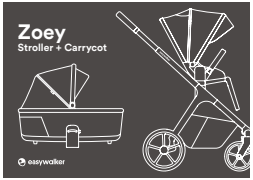
1x
Zoey
Stroller + Carrycot
easywalker
9

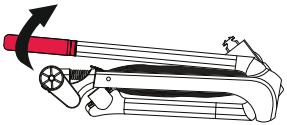
2.1
1

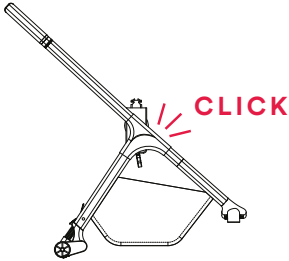
CLICK
2

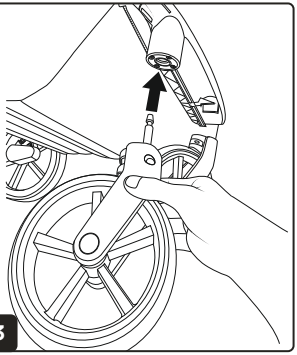
3

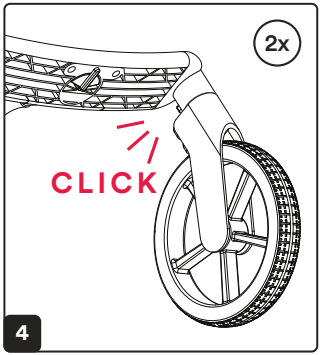
2x
CLICK
4

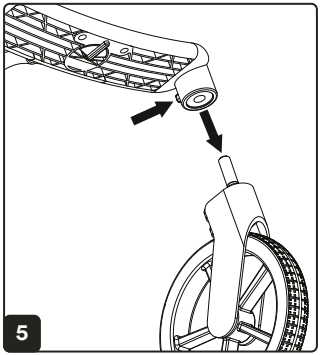
5

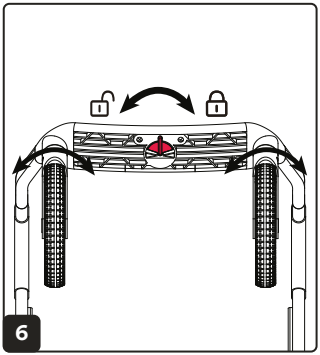
6

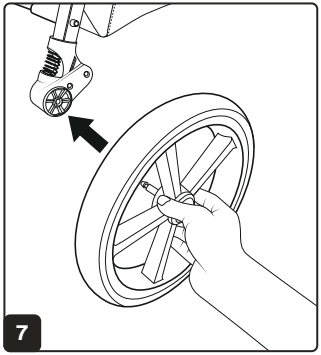
7

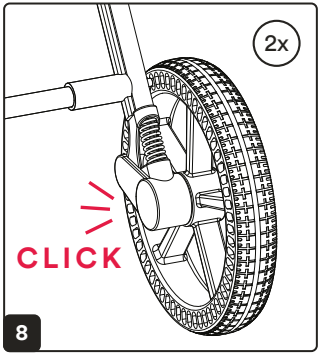
2x
CLICK
8

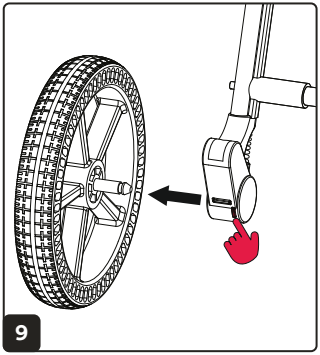
9

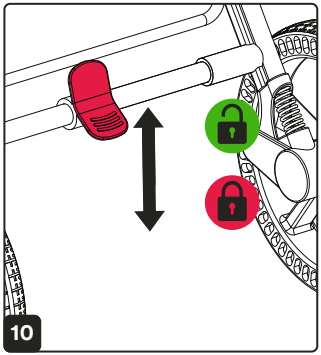
10

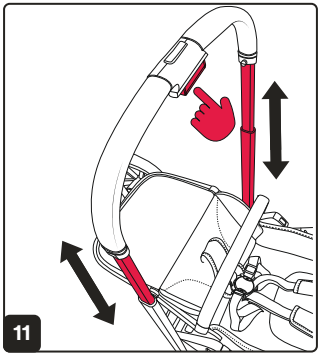
11

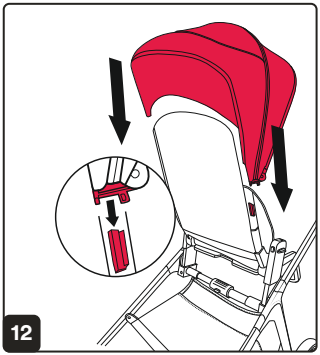
12

CLICK
13

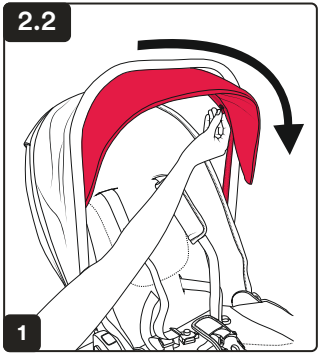
2.2
1

2

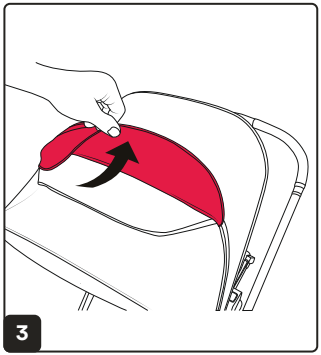
3

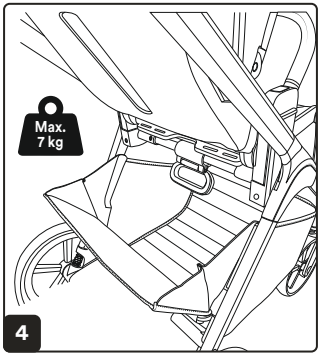
Max.
7 kg
4

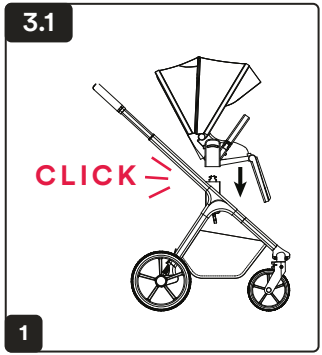
3.1
CLICK
1

2

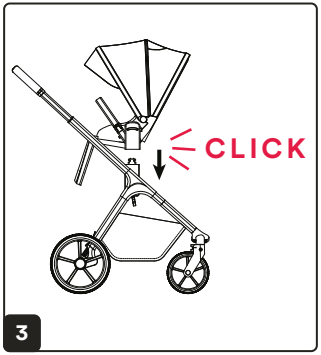
CLICK
3

4

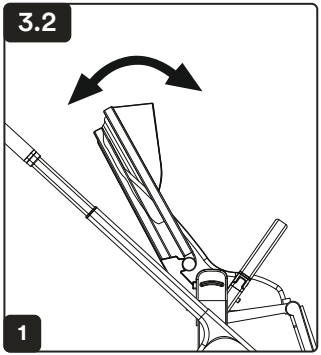
3.2
1

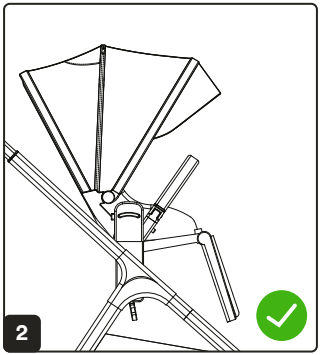
2

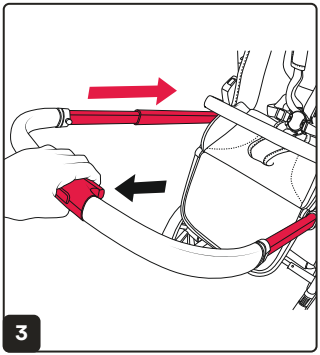
3

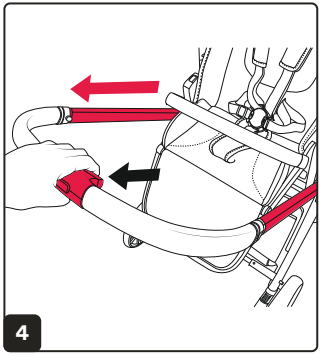
4

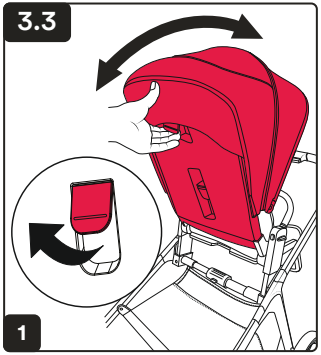
3.3
1

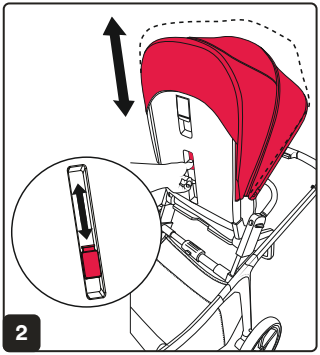
2

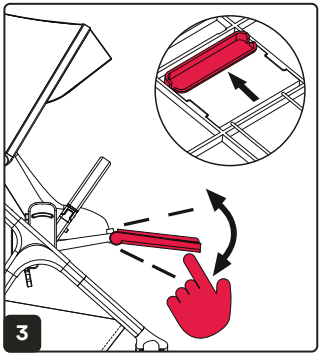
3

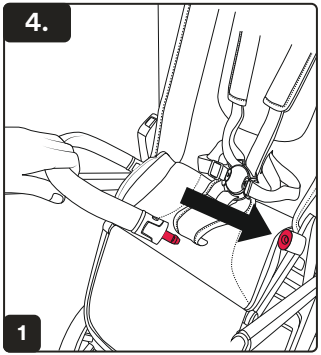
4.
1

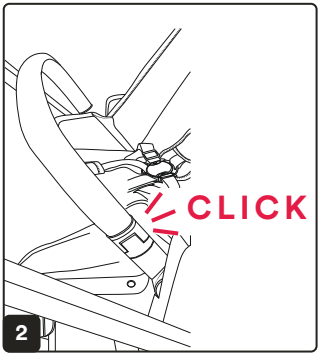
CLICK
2

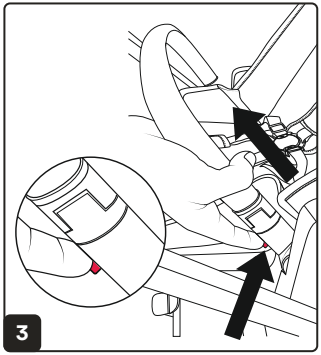
3

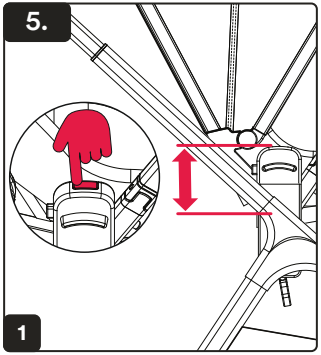
5.
1

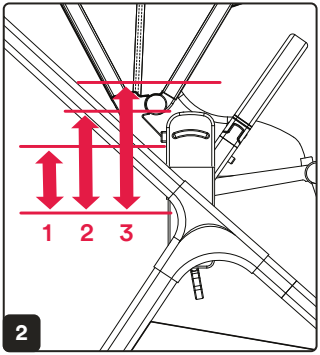
1 2 3
2

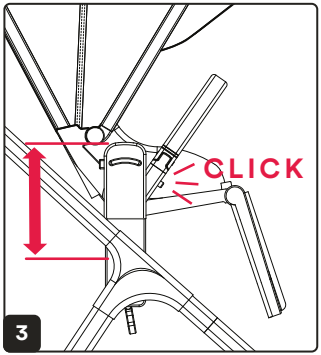
CLICK
3

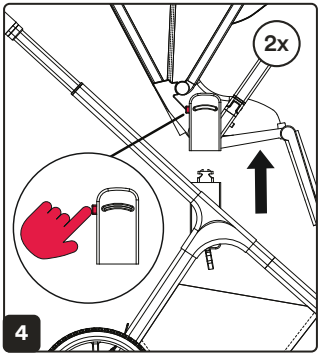
2x
4

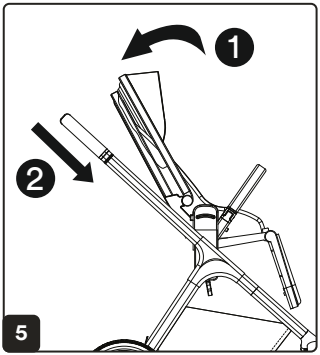
1
2
5

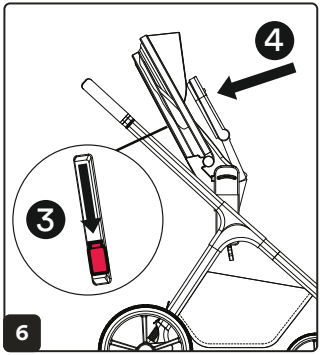
4
3
6

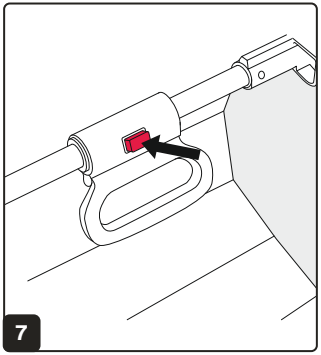
7

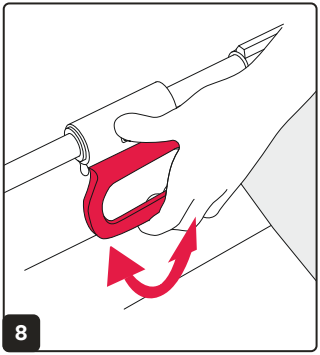
8

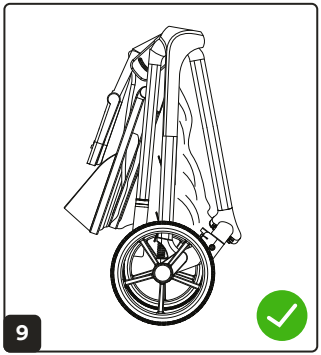
9

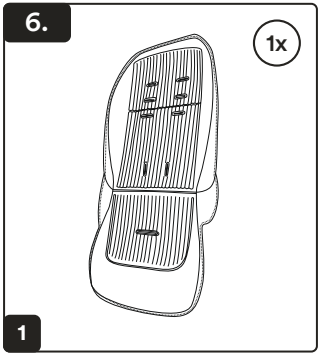
6.
1x
1

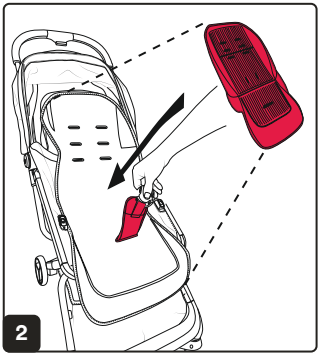
2

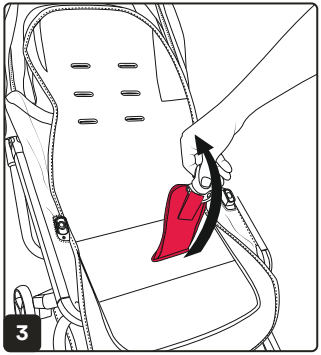
3

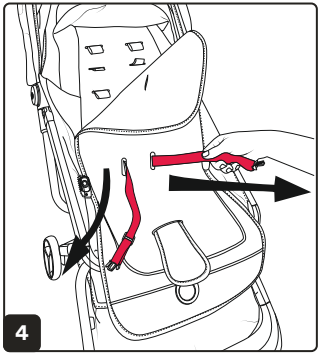
4

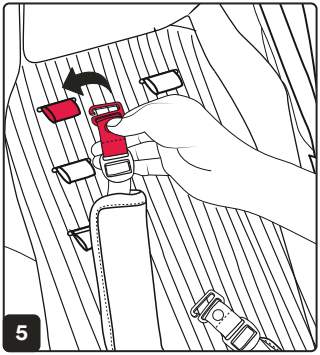
5

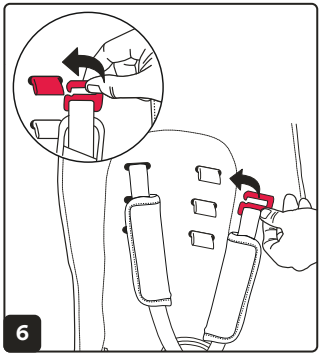
6

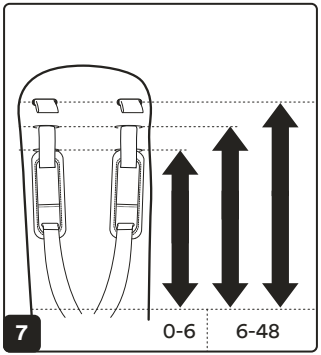
7
0-6
6-48

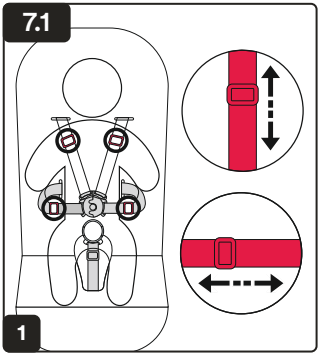
7.1
1

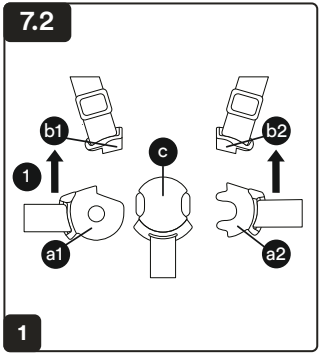
7.2
b1
c
b2
1
a1
a2
1

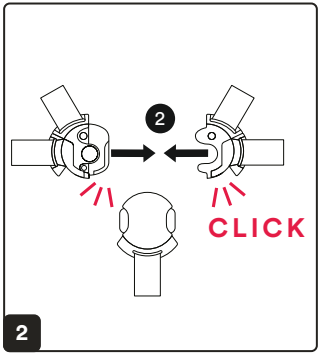
2
CLICK
2

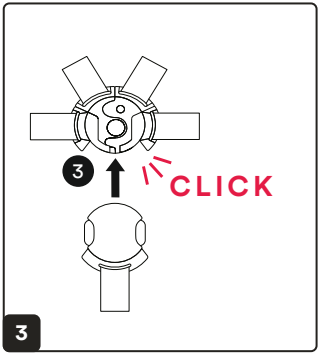
3
CLICK
3

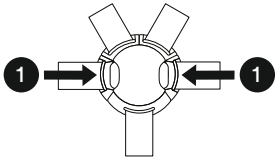

4

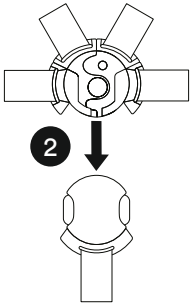

5

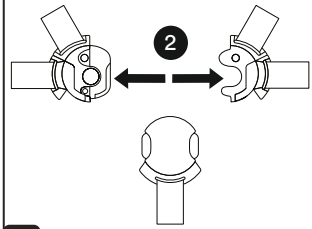

6

8.1

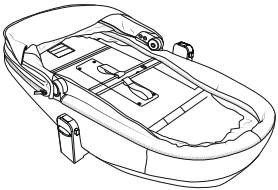

1

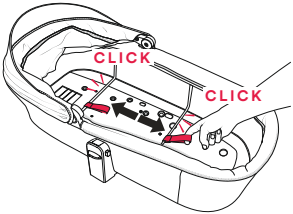

2

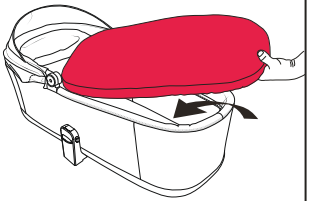

3

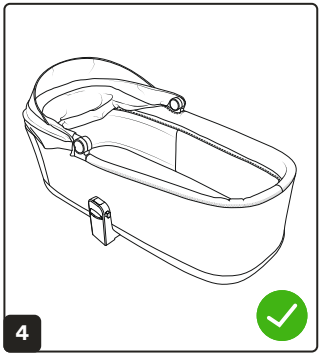
4

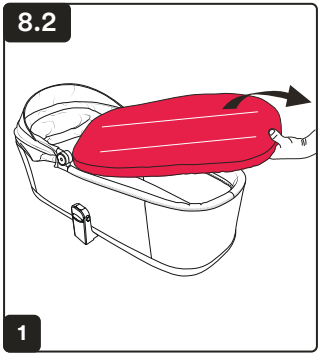
8.2
1

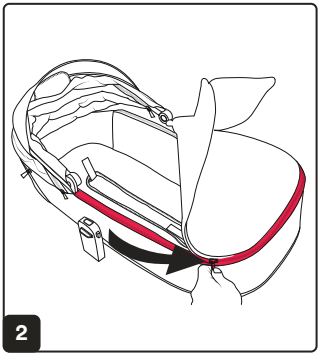
2

3

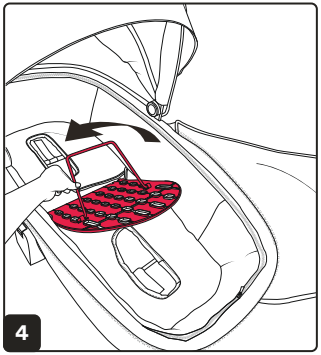
4

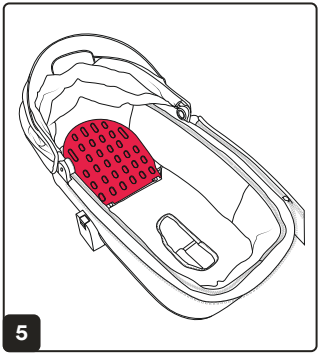
5

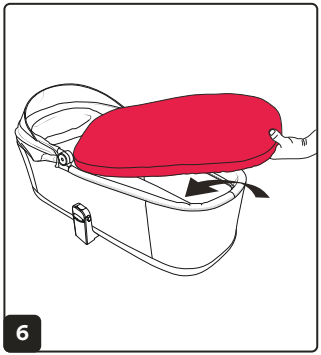
6

7

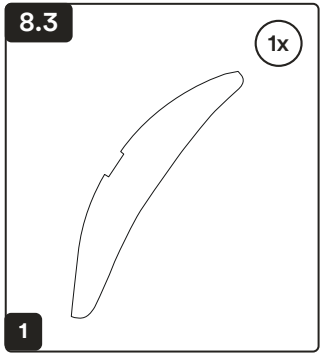
8.3
1x
1

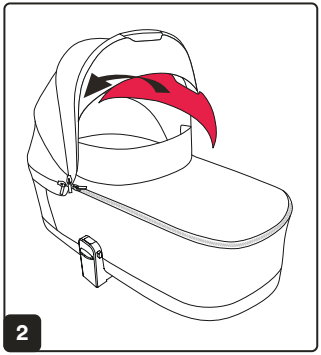
2

3

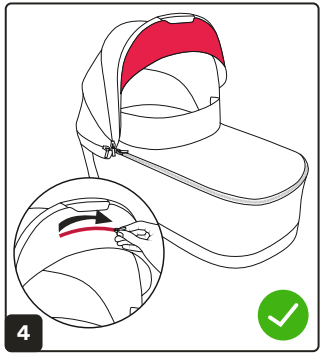
4

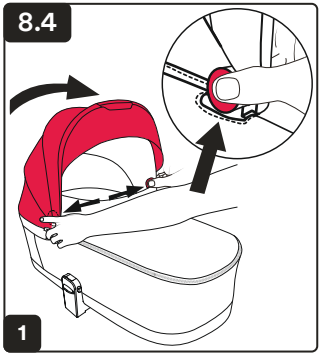
8.4
1

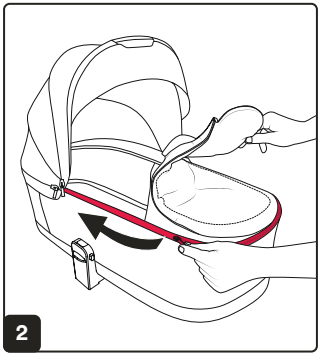
2

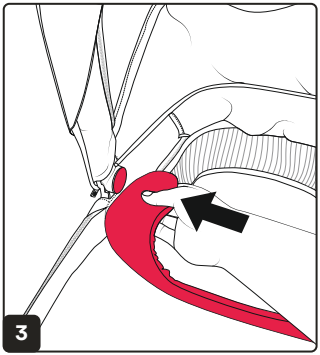
3

4

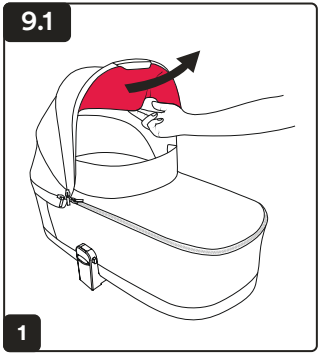
9.1
1

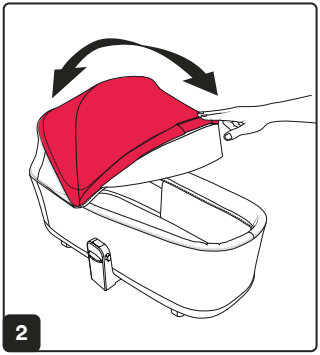
2

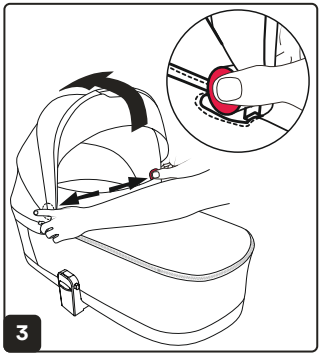
3

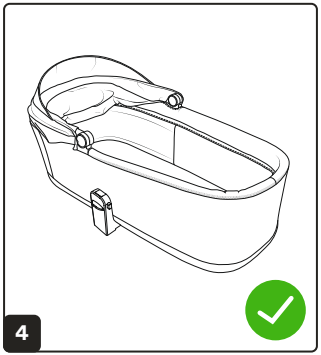
4

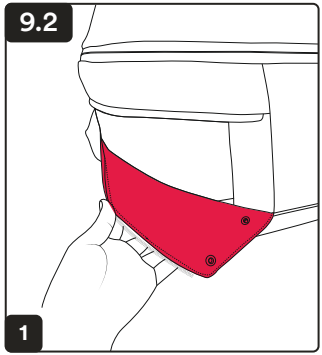
9.2
1

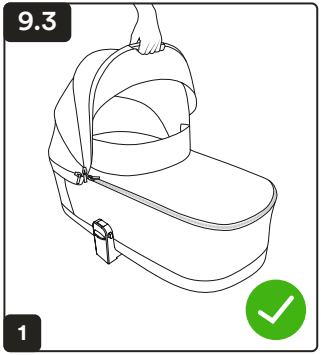
9.3
1

2

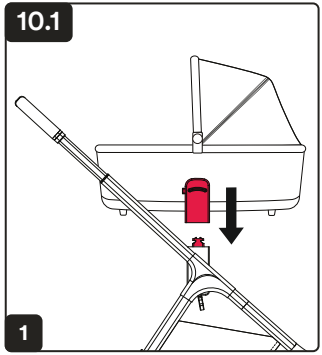
10.1
1

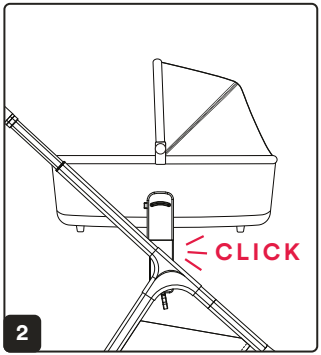
CLICK
2

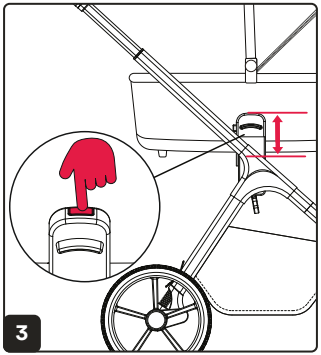
3

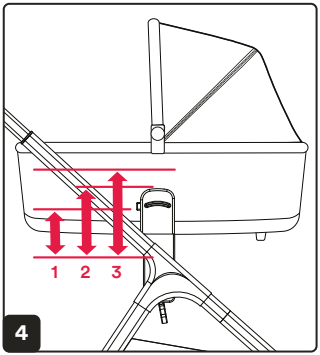
1 2 3
4

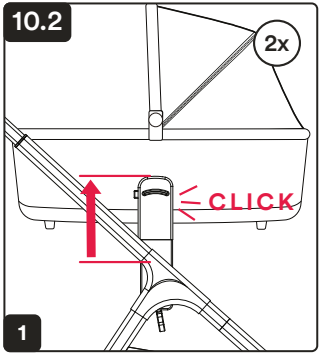
10.2
2x
CLICK
1

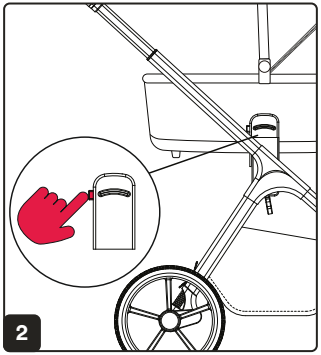
2

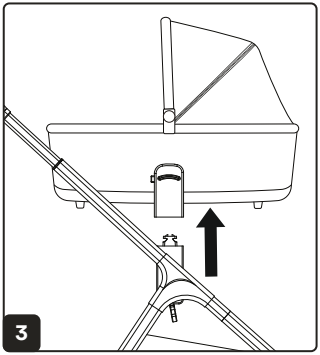
3

11.

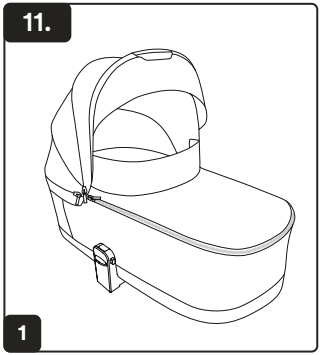

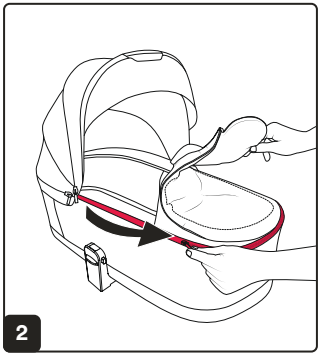

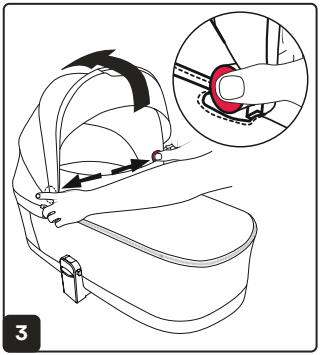

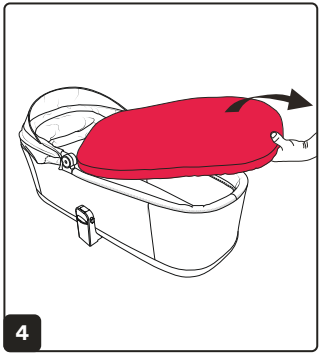

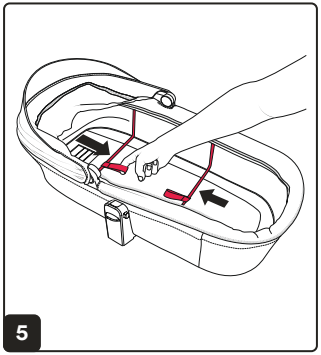

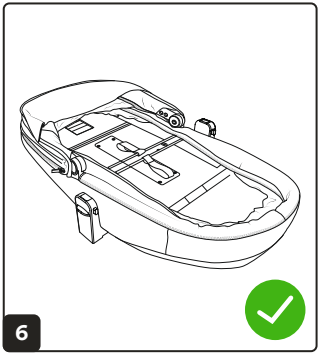

Accessories

Accesorii / Accesorios / Accessoires
Accessoires / Accessori / Acessórios
Akcesoria / Аксесоари / Kiegészítők
Lisävarusteet / Lisatarvikud / Piederumi
Priedai / Pribor / Příslušenství / Príslušenstvo
Tillbehör / Tilbehør / Tilbehør / Zubehör

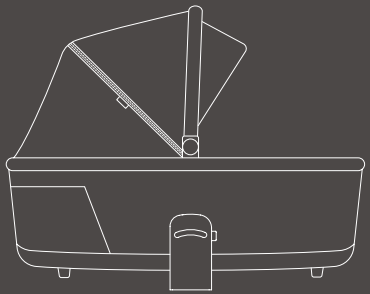

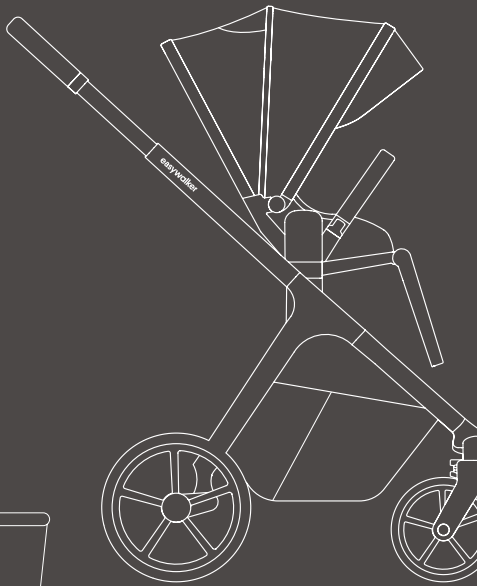

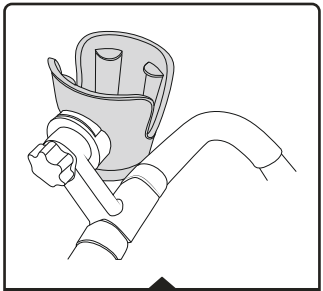

Cup holder

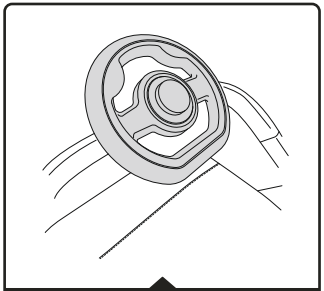

Steering wheel

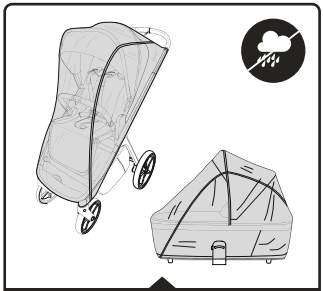

Universal raincover stroller + carrycot

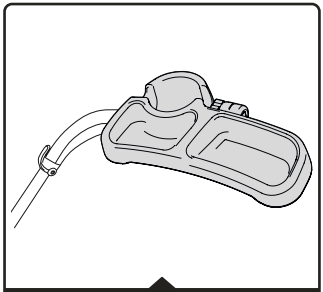

Food Tray

Footmuff

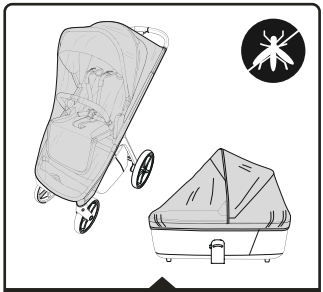

Universal mosquito net stroller + carrycot

Distributors

Distribiutoriai / Distribuidores / Distribuidores
Distribuitori / Distributeri / Distributeurs
Distributeurs / Distributörer / Distributører
Distributører / Distributori / Distributoři
Distribútori / Dystrybutorzy / Forgalmazók
Izplatītāji / Jakelijat / Jaoturid
Vertriebspartner / Дистрибутори

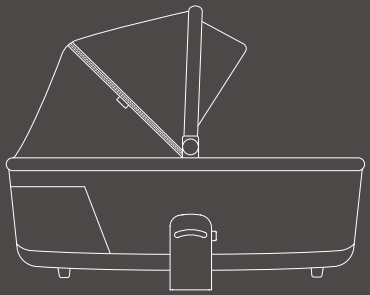

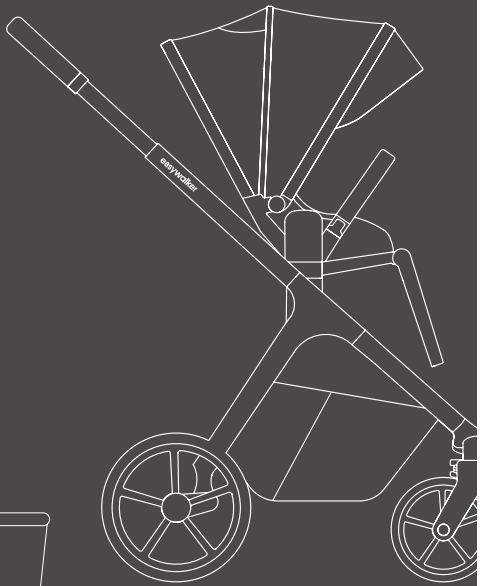

The Netherlands | Austria
Belgium | Croatia | Denmark
Finland | France | Germany
Ireland | Italy | Latvia
Lithuania | Luxemburg
Norway | Portugal | Romania
Spain | Sweden | Switzerland
Easywalker B.V.
Generaal Vetterstraat 76a
1059 BW Amsterdam
The Netherlands

Bulgaria
Bebemax
Transportna Str. 15,
8000 Burgas
Bulgaria

Czech Republic
ags 92, s.r.o.
Drahobejlova 2515/18
Praha 9 – Libeň, 190 00
Czech Republic

Estonia
Babyshop OÜ
Riia 142
50411 Tartu
Estonia

Hungary
ags 92 Kft
Szent Imre út 61/A 1.em.
9028 Győr
Hungary

Slovakia
ags 92, s.r.o.
Pestovateľská 13
821 04 Bratislava
Slovakia

EN1888-2:2018+A1:2022

EN1888-1:2018+A1:2022
EN1466:2023

EN1466
approved

EN1888
approved

Dutch Design
Made in China

Scan the QR code
for step-by-step video guides on assembly and usage!

easywalker

Easywalker Zoey Manual V2.0
www.easywalker.com